Szent István University

TRIBOLOGY RESEARCH OF ENGINEERING POLYMERS IN DIFFERENT SYSTEMS

Thesis of the (PhD.) dissertation

Zsidai László

Gödöllő, Hungary
2005.

The doctor's school:

designation: **Technical Scientific Doctor's School**

branch of science: **Agricultural- technical Science**

director: **Dr. Szendrő Péter**
professor, DSc
Szent István University, Faculty of Mechanical Engineering
Gödöllő, Hungary

Project promoter:

Dr.habil. Kalácska Gábor, PhD
associate professor
Szent István University, Faculty of Mechanical Engineering
Gödöllő, Hungary

…… ……
director of doctor's school project promoter

Table of contents

1. INTRODUCTION, AIMS

Beside the corrosion and fatigue, the friction and wear are the basic failure mechanisms of the moving machine elements. The friction is caused by sliding between the load carrying machine elements. The sliding friction brings on the wear of the machine construction and can result final break-down in many cases. Because of the strength, chemical resistance and self-lubricating ability of polymers, they can be chosen as sliding material in many applications of machine construction.

However, the replacement of metallic materials by polymers often needs tribotesting of the operational system. In most cases, this investigation is very difficult and expensive, since many times one–one tests are not enough for accurate determination of the tribological behaviour. Consequently, standards recommend simplified laboratory tests with small-scale specimens. The reasons for these so-called small-scale tests are quite obvious, e.g. simple test rig with low forces and power, reduced cost for preparing test specimens, easy of control of environment. Moreover many small-scale results are available in literature to be referenced. They are useful to compare the properties of different materials, but induce unrealistic edge effects. Very often, also the heat balance is not realistic. For a better simulation of the real machine component, in some cases large-scale testing can be recommended.

The small-scale test results obtained recently give more and more new knowledge about the tribology behaviours of modern constructional materials. This is true mainly for the standardised "tribo" systems, because of these are easily obtained and there is a possibility to make fast tests. Unfortunately we have only little information about the tribological properties of polymers concerning some extreme cases e.g. high load under different condition and also there is a lack of data about the tribological effect of DLN coating.

The tribological properties of polymers strongly depend on the sliding (tribo) friction systems. The experiences express the difficulty of determination of the tribological properties from only one-one friction tests with the same parameters. It is necessary to create different tribo test systems with different parameters to establish a better database of polymers.

Most of the tribology test systems do not apply or there is no possibility of use high normal pressure between the sliding surfaces. It mainly depends on the contact geometry, where we can increase the load with the decrease of contact area e.g. counter formal contact (line or point). One practical solution I have applied for this problem is the CYLINDER ON PLATE tribo system.

It is generally true from the literature and tribotesting practices that most of the tribology test rigs provide a continuous sliding friction (PIN ON DISC, BLOCK ON RING, and FOUR BALL TESTS). Therefore in the literature we can see mostly dynamic friction results measured under steady condition. Regarding the global friction and wear behaviour of engineering polymers we must target the investigation of static friction coefficient as well to approach e.g. the disadvantageous stick-slip phenomenon. That’s why I selected the reciprocating test rig (like HFRR) to determine both friction coefficients.

1.1. The aims of the research works

Regarding the above written the main aim of my research work was to investigate the friction and wear behaviour of engineering polymers machined out from semi-finished (extrude and cast rods) polymer forms. During the evaluation of the results of my research work I put emphases on describing the system-independent phenomena beside the points that are:

- Comparison of friction and wear behaviour of different engineering polymers in connection with their chemical and mechanical properties. Description of the basic failure process of engineering plastics during dry sliding in different conditions.
- Definition of the safety of the polymers against overload, to determine the effect of different internal (filled) lubrications on the tribological behaviour of polymers.
- investigation the effect of the modern diamond like carbon nanocomposit (DLN) coating on the sliding fiction of engineering polymers comparing to the traditional steel surface, taking the adhesion and the heat conduction of the mating surfaces into account. The obtained results will support the application of the DLN coating with increasing performance of e.g. bearings, sliding elements, gears etc.
- Further aims of the research: to determine the optimal operational conditions of the selected polymers, and to give a help for the selection of a proper polymer for a certain condition.

The selection of the tested polymers and composites was made on the database of polymer producers, end-users and expertizing companies at this field. The finally selected engineering polymer materials can be taken as generally used engineering materials in the industry in sliding systems. Some of the like polyamides are well-known but some composites are just being spread. My research work is the first scientific approach to the difference of the tribological behaviour originated from the production technology of cast polyamides (Na and Mg catalytic).

The materials: three cast PA 6 were tested (PA 6G-Na-catalysed, PA 6G/oil-lubricated and PA 6G-Mg-catalysed). Also polyacetal such as polyoxymethylene homopolymers (POM-H), and polyethylene terephtalate reinforced with solid polytetrafluorethylene lubricant (PETP/PTFE) are included in the experiments.

All the mentioned polymers are classified as thermoplastic, semi-crystalline engineering plastics. Each measurement was carried out without external lubrication.

2. METHODS OF THE RESEARCH

2.1. Locations of the research

I divided the test methods into two main systems and according to the practical possibilities I carried out the investigations at different places. The CYLINDER ON PLATE tests, which is discussed in the first part of dissertation, was made in Ghent University, Laboratory Soete, St Pietersnieuwstraat 41, B-9000 Gent, Belgium, in the frame of the research project OTKA T 032590.

The next group of the investigations was the PIN ON DISC tests, which were carried out at the Flemish Institute for Technological Research, Boeretang 200, B-2400 Mol, Belgium in the frame of the research project OMFB TéT B-9/98, BIL 98/72. Some additional tests, like drop tests, investigations of heat conductions and wear depth were also made at VITO.

The elastic deformations, creep, static deformation of polymers were investigated with dynamic tribo tester in Hungary at Department of Mechanical Engineering Technology and Maintenance of Machinery, St. Stephen University, Gödöllö.

2.2. The investigated materials

Material of the polymer cylinder

Among the widely used polyamides (PA), three cast PA are tested (PA 6G-Na-catalysed, PA 6G/oil-lubricated and PA 6G-Mg-catalysed). Also polyacetal such as polyoxymethylene homopolymers (POM-H), and polyethylene terephtalate supplied with solid polytetrafluorethylene lubricant (PETP/PTFE) are included in the experiments. The PETP/PTFE and POM-H have reduced deformation ability, due to the higher tensile stress and lower strain at break. They are said to be more rigid. On the other hand, the higher elasticity modulus can cause a lower surface energy, expecting less sticking and a lower friction coefficient in opposite to PA. For PA, the Na-catalysed PA 6G is used as reference. The addition of oil (Ø2-6 μm ball forms) as internal lubricant has little effect on the mechanical properties in opposite with PA 6G Mg. In the latter case deformation, toughness and rigidity strongly increase for Mg-catalysed polymerisation. Both effects (oil lubrication or different catalytic process) will interfere with friction and wear properties, as discussed later. The marking what is used by the manufacturer is showed in table 1.

Table 1. Marking of the polymers in the dissertation

Shortened marking	Professional identification	Manufacturer's marking
PETP k	polyethylene terephtalate + polytetrafluorethylene	ERTALYTE TX
POM-H	polyoxymethylene homopolymers	ERTACETAL H
PA 6G k	cast polyamide 6 + mineral oil	ERTALON LFX
PA 6G	natrium catalysed cast polyamide 6	ERTALON 6 PLA
PA 6G-Mg	magnesium catalysed cast polyamide 6	TERAMID

There could be different effect of the internal lubrication and different catalysing of the polyamides on the friction and wear due to the modified mechanical properties and surface energy, too.
I used different forms of the polymer specimens for the tests:

- In CYLINDER ON PLATE tribo systems the diameter ∅6 mm, length l=12 mm (see Fig.1.)
- In PINS ON DISC tribo systems the diameter, ∅5 mm, length l=10 mm (see Fig. 3.)

Material of the mating part for CYLINDER on PLATE tests

The counter plates are made of hardened and tempered 40CrMnNiMo8 steel (German standard DIN 1.2738). Steel surfaces are hardened and tempered to approximately 300 HB.

In case of CYLINDER ON PLATE tests the dimension of the steel plate was 58x38x4mm. Two different methods for preparing the steel surfaces are used. The first consists of grinding the surface to a roughness Ra = 0.1–0.3 μm. In order to obtain a lower roughness, the steel substrates are polished with SiC-paper (grid 400 and 600) to a Ra-value of 0.02–0.08 μm.

The grinding grooves are made parallel to the sliding direction during the wear tests. Roughness is measured perpendicular to the sliding direction.

Material of the mating part for PIN on DISC tests

I used steel discs for the PIN ON DISC tests, what were used two different execution. The half of discs was coated by DLN, and the half of were used just pure, without coating. The dimensions of the discs were the next: diameter 51 mm, length 6 mm.

Plasma assisted chemical vapour deposition (PA— CVD) process was used for the deposition of a thin DLN surface layer onto ultrasonically rinsed and Ar—plasma etched steel substrates. Adhesion between coating and substrate is verified by means of a scratch test with a Rockwell C indenter, where a critical load of at least 30 N is reached without delaminating. The coating has a thickness of 2 μm. It shows lower surface energy (35 mN/m), but also lower hardness and wear resistance compared with DLC-coatings, but its coefficient of friction against steel is lower. Its structure consists of two interpenetrating amorphous networks, a diamond-like (a-C:H) and a glasslike (a-Si:O) network. Both phases are respectively stabilised by hydrogen and oxygen. The DLN coatings are used for machine elements with good wear resistance, medical, office and military instruments, electronics etc.

2.3. The CYLINDER on PLATE research process and test rig

The first essential part of my investigations was the CYLINDER ON PLATE tests. It was carried out by means of a reciprocating test rig applying counter formal contact in the sliding area. According to this contact I started the experiments with extra-high load level getting information about complex overload behaviour (friction, wear, deformation heat expansion).

Apparatus

The experimental set-up as pictured in Fig. 1 is essentially a variant of the commercially available PLINT reciprocating tribotest rig (TE 77 High Frequency Tribotest). The detailed close-up of the equipment shows that reciprocating sliding friction is created by a polymer cylinder (2), which moves against a lower steel plate (3) in counter formal contact. The polymer specimen is fixed to the moving fixture (1) by two nuts and a clamp (4), preventing it to roll during the test and thus simple sliding is guaranteed. The oscillating motion of the cylinder is provided by a controlled variable speed motor (7) through an eccentrically power transmission for the adjustment of the stroke. The steel plate is fixed to the stationary plate holder (6) and is supported by a guide way of slide and nuts (11) that allows the positioning of the mating plate. The slide of plate holder (9) is connected to a base plate (10) by means of four leaf springs (8). The springs have very high stiffness

in the vertical direction but are flexible in the horizontal direction. The horizontal movement is impeded by the friction force transducer (13). The machine is equipped with a manual loading system, which consists of a bridge (12), mechanically pulled down by rotation of a crank handle (not shown in Fig. 1). The normal force is transmitted directly onto the moving specimen by means of a roller cam. A piezo-electrical force transducer (13) is used to measure the friction force. The normal displacement of the cylindrical specimen towards the steel plate, as a result of the wear, is measured by a contactless proximitor (14). The dimensions of the small-scale specimens are included in Fig. 1. The polymer cylinder has a diameter of 6mm and length of 12mm while the steel mating plate sizes is 58×38×4mm.

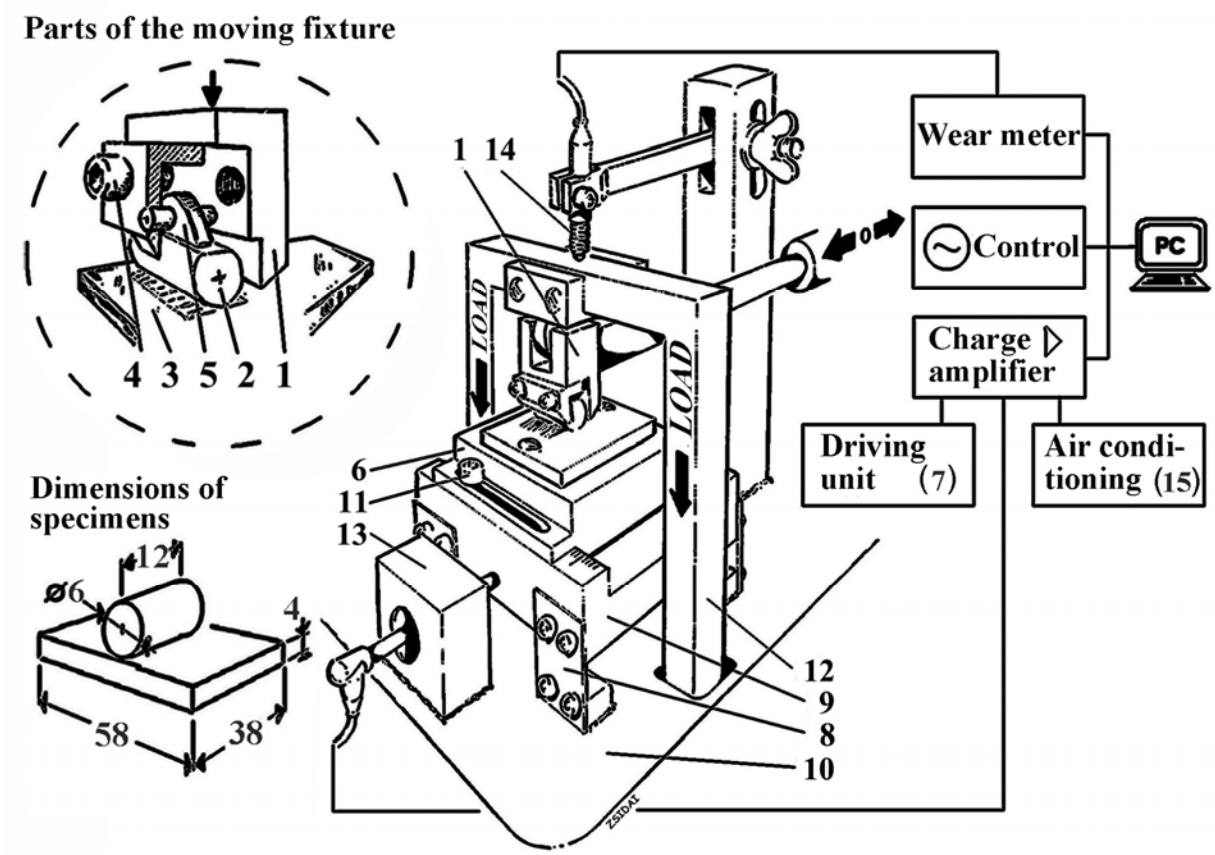

Fig. 1. PLINT TE 77 high-frequency frictional testing equipment and dimensions of the specimens: (1) moving fixture; (2) polymer cylinder; (3) fixed steel plate; (4) nuts and clamp; (5) load distributor; (6) plate holder; (7) electrical motor; (8) leaf spring; (9) slide with smooth guide way; (10) base plate; (11) screw; (12) loading frame; (13) piezo-electrical transducer; (14) contactless proximitor; (15) air conditioning system.

Test conditions

All experiments are performed at ambient conditions of temperature and humidity (30 C and 50% RH). The atmosphere in a closed box around the test specimen is controlled by an air

conditioning system (Fig 1/15). The various conditions of the performed small-scale tests are gathered in Table 2.

Table 2. Test conditions

Test conditions	Category I		Category II	
Surface of steel specimen, R_z [μm]	0,1-0,4	0,6-1,6	0,1-0,4	0,6-1,6
Running time, t [h]	2		1	
Load, F_N [N]	100		200	
Frequency, f [Hz]	30			
Velocity, v [m/s]	0,27			
Stroke, s [mm]	4,62			
Humidity, RH [%]	50			
Ambient temperature, T [°C]	30			

Tests are conducted with two different normal loads: 100 and 200 N. The running time of the test is chosen in accordance with the normal load in order to obtain similar magnitude of the final wear. In this way excessive wear and damage is avoided. For each load category, two different surface roughness of the steel specimen are used to simulate a variation of application conditions (adhesive wear/abrasive wear). Each type of polymer has been tested under the various combinations of load and surface roughness and the tribological data described below result from an average of three runs with identical experimental parameters.

Determination of the wear volume and specific wear rate

The wear measurement as a change of the specimen height during the friction test is proper to determine the specific wear rate per stroke, because between the strokes the deformation and heat conduction are approximately the same at the steady state. The wear depth is characterised by the change in height of the cylindrical specimen measured by means of a contactless proximitor (see Fig.1/14). However, some disturbing effects like creep and linear thermal expansion of the polymer can interfere during the running-in stage.

This complex effect can be seen in figure 2. It is shown that after the start of the sliding the wear increases very fast. During this period the line contact goes in to surface contact regime resulting much lower stress distribution. Due to the lower stress the elastic deformation changes and modifies the real measured specimen height.

Avoiding this disturbing effect I measured the features over the running-in stage and used other method to determine the real wear. I measured the diameter of the polymer specimen before and after testing by means of a microscope with accuracy of 1 μm. The *wear rates* are calculated from the total thickness reduction of the specimens based on the average of three tests. The wear rates of the polymers with different applied test loads and surface roughness are shown in table 4. and 5.

I made control measurements to determine the difference between the measured and real wear. These investigations are presented in my dissertation.

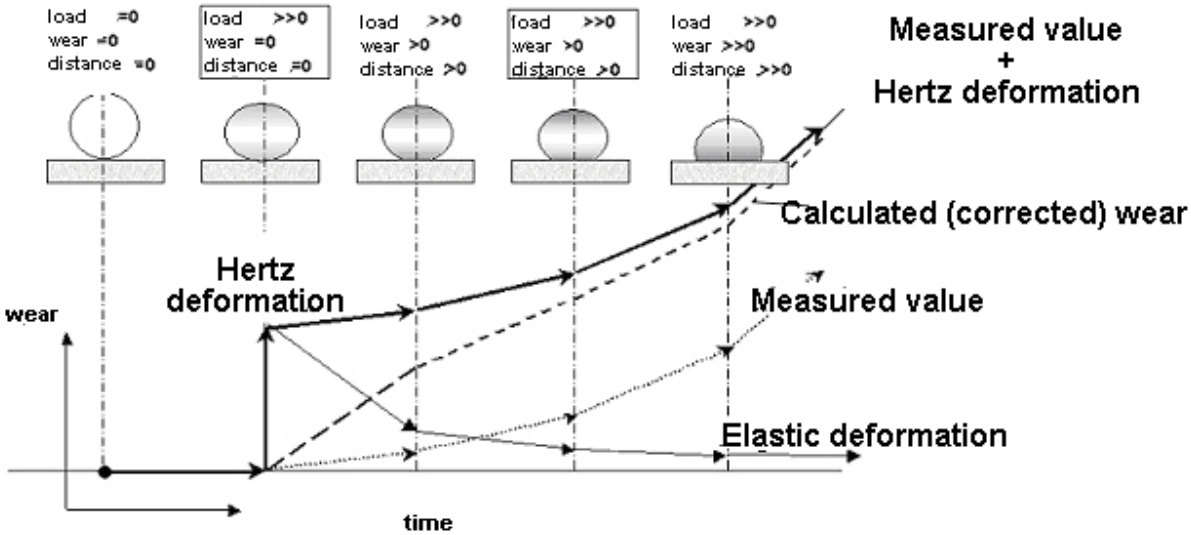

Figure 2. The deformation component of the measured wear value

We can find different definition of the wear in the literature. I determine the wear in mm^3/Nm, which means the wear volume per normal load unit and 1 m sliding distance.
I calculated the wear volume (V_{wear}) from the slice of cylinder.

-sliding distance (L): $L_{slide}=2\cdot s\cdot f\cdot t$ [m]

-specific wear (k): $k=V_{wear}/(L_{slide}\cdot F_N)$ [mm^3/N m]

Since:

-stroke s=4,64 mm==4,64 10^{-3} m
- frequency f =30 Hz
-time t =3600 s; 7200 s;
-wear volume V_{wear}, [mm^3]
-sliding distance L_{slide} [m]
-normal load F_N =100 N; 200 N

2.4. Test equipment: standard WAZAU PIN ON DISC tribometer

Sliding friction was performed on different polymer/ steel and polymer/DLN-coated sliding pairs in the standardised Pin-on-Disc (ASTM *699-95a)* arrangement, without additions of external lubricants. The positioning and dimensions of the test samples and their counter face discs is schematically shown in figure 3/a. The holder for the counter face discs is provided with two supplementary prismatic clamps in order to allow for a more accurate positioning of the circular disc. The figure 3/b. shows the practical construction of the WAZAU TRM 1000 tribometer with its different elements, the sliding motion of the samples, the way of load transfer and the selection of the frictional track. Vibrations of the test equipment are reduced by a massive granite support. With a turn-free attachment in order to ensure a homogeneous contact surface, the cylindrical polymer sample is fixed into a clamp head (2), providing a continuous rotational motion. The radius of the frictional track is determined by the position of the guiding rail (3). The end surface of the polymer

cylinder is facing the metal counter face plate (1), providing continuous sliding friction. The stationary metal counter face (original steel plate or DLN-coated steel plate) is fixed to the supporting table and is mechanically pushed against the test specimen with a constant load by means of a lever system *(5)* and dead weights *(6)*. In this way, a conformal contact is ensured between the end surface of the polymer cylinder and the steel or DLN-coated disc, which can be regarded as a rigid body as opposed to the plastic sample.

The so-called bulk temperature is measured on the counter face disc with a thermocouple at the position indicated by *(*)*. The wear is characterised by the drop in height of the polymer cylinder, and is measured with a contactless proximitor. However, dimensional measurements of the polymer specimen interfere with deformation effects occurring from creep, thermal expansion or elastic kick-back. Therefore, additional weight measurements are performed before and after test to determine 'real' polymer wear as material loss. The final wear tracks on the counter faces are studied by means of optical microscopy. The volume of polymer transfer is an additional observation qualifying wear.

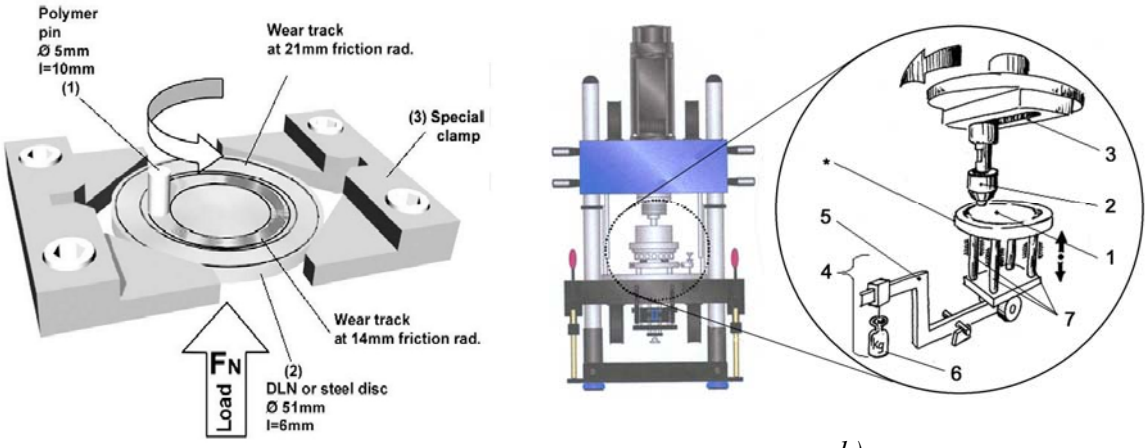

a) *b)*

Fig. 3. a) Contact situation and dimensions of the polymer pins and counter face disc (Pin-on -Disc) b) Test equipment: WAZAU TRM 1000 TRIBOMETER
*1-fixed DLN coated or steel counter face, 2-rotating clamp head with cylindrical polymer sample, 3-guideing rail positioning of the frictional radius, 4-loading system, 5-force arm, 6-dead weight, 7-supporting columns for vertical positioning, *-measuring point of disc temperature (bulk temperature)*

<u>*Test parameters*</u>

The test conditions are chosen from two test categories, as grouped in table 3. Both categories differ in applied normal load and sliding velocity, representing different pave-values. The test parameters are to he applied uniformly on every tested polymer, without causing any melting or excess deformation of the material by not exceeding the maximum pv-limit. Moreover, the loading capacity of the tribometer has to be taken into account, and the test conditions have to be in accordance with practical use, obtaining relevant results for the different materials.

For category I, a normal load of *10* N and a sliding velocity of *1* m/s are applied. For category II, a normal load of *35* N and a sliding velocity of *0.5* m/s are applied. With a polymer pin contact surface of 19.63 mm^2 remaining constant during wear, the mean contact pressure corresponds to *0.51* MPa for category I and 1.78 MPa for category II. Each category of test parameters is applied on the five types of polymers, sliding against uncoated steel and DLN-coated steel with two different Frictional radii (14 and 21 mm) of the rotational movement. The final

surface roughness Rz=0.01 -0.03 μm is identical for both types of counter faces and is measured perpendicular to the sliding direction by means of a Perthen 5 SP instrument. The testing time is chosen to be sufficiently larger than the running-in period to ensure steady-state conditions, corresponding to total sliding distances of 3600 m at category I. (10 N, 1 m/s) and 1800 mat category II. (35 N, 0,5 m/s).

As there are many reports on the influence of environmental testing conditions on the tribological properties of DLN-coatings as well as on the sliding performance of some polymer materials as, e.g. polyamides, all tests are performed under controlled atmosphere by means of a climate conditioner. Environmental temperature was held constant at 23 ^{0}C and relative humidity at *50 %*. Before each test, the samples were ultrasonically cleaned with 2-propanol to remove contaminants.

Table 3. Test conditions

Test conditions	Category I	Category II
Surface of disc specimen R_z, [μm]	0,04 - 0,08	
Running time, t [h]	1	
Load, F_N [N]	10 (≈0,5 MPa)	35 (≈1,78 MPa)
Velocity, v [m/s]	1	0,5
Humidity, RH [%]	50	
Ambient temperature, T [°C]	20-25	
Friction radius, r [mm]	14, 21	

2.5. Additional investigations

During the experiments a need arose up to complete the conclusions with drop tests, surface and polymer layer analysis.

Investigations of the surface energy by Drop tests

Concerning the surface energy I used the drop test evaluation method. I measured the angle between different liquid drops and the investigated materials. The calculation method is based on Laplace–Young fitting, evaluating the surface energy and polarity of a given polymer sample by using the contact angles of different test liquids. The total surface energy (γ) [mN/m], is provided from the summing-up of the polar (γ_p), [mN/m] and disperse (γ_d), [mN/m] components

$$\gamma = \gamma_{d+} \gamma_p \qquad [mN/m]$$

Water and diiodomethane (CH2I2) are used for contact angle measurements. Drop tests are carried out with sessile drop types (static:normal SD). All the results are provided by static measurement.

Investigations of the wear track on the steel surfaces by optical microscopy

I investigated the sliding surfaces after the test to compare the different areas and different forms of the transfer layers. I took photos about every specimen track at every category (see. Fig 9.).

Approach of the thickness of the polymer layer on the mating surface by surface roughness measurement

The measurement of the surface roughness is a simply method to compare the thickness of different polymer layer. Depending on the location of the experiments I used two roughness measuring methods. In case of CYLINDER ON PLATE tests I measured the surface roughness before (R_{z1}) and after (R_{z2}) the tests and I calculated the difference of these R_z value.

In case of PIN ON DISC tests I measured the roughness profiles by a contactless profilometer. (Fig 13. and Fig. 14.)

3. TEST RESULTS

3.1. The friction coefficient and wear results measured in CYLINDER ON PLATE laboratory model system

I measured the static and the dynamic friction coefficient, too. It is clear from the friction curves (this booklet does not contain these curves) that static friction higher (55-65%) than dynamic coefficient. This tendency can be stated in general. Knowing this in the followings I present only the dynamic friction results.

3.1.1 Small-scale test category I. 2 h/100 N

Fig. 4. shows the dynamic friction coefficient and wear rate of polymers tested under the conditions of category I.

For the correct interpretation of the graphs and tables mentioned below, the following annotations are emphasised: The dynamic friction coefficient is represented in Figs. 4 and 5. For each material, the first column refers to the smoother counter surface (R_z = *0,1–0,4 μm*) and the second one refers to the rough counter surface (R_z = *0,6–1,6 μm*). In each case, the regime friction is depicted by a column and the maximum value of the friction coefficient attained during the test, is represented by the black dot above the column.

All values are averaged from three test runs with identical parameters.

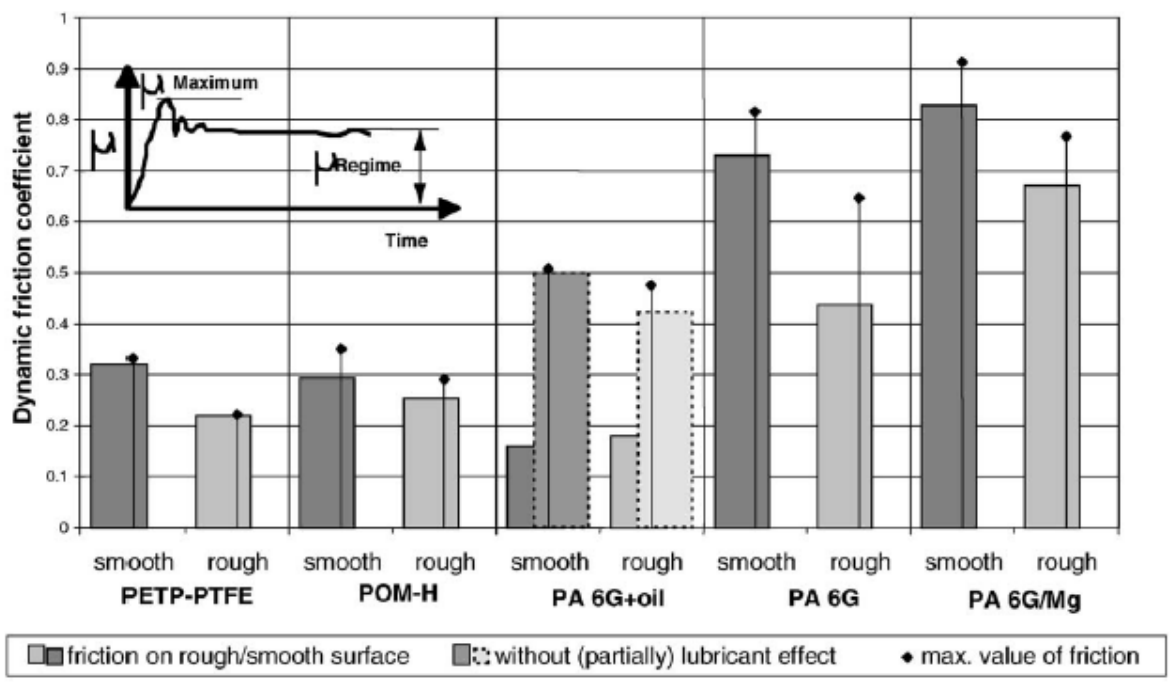

Fig. 4. Dynamic friction coefficient for different materials and surface roughness (category I: running time = 2 h-2000 m; load = 100 N; surface roughness „S" (R_z=0,1-0,4 μm) /"D"(R_z=0,6-1,6 μm)).

There is a general tendency that friction coefficient is lower on rough counter surfaces. Wear is found to be less on smooth surfaces. From the point of view of friction, POM-H and PETP-k are most favourable and seem to have the lowest values over the total sliding time, for smooth as well as for rough counter surfaces.

- For POM-H, the surface roughness hardly affects the frictional behaviour (μ_{dyn} = 0.29 („S”)–0.25 („D”)) and after the initial peak-value, its steady-state regime is quickly reached. POM-H has the lowest wear rate on both roughness of the counter face.
- PETP–k has a low, but slightly different friction coefficient on smooth and rough counter faces (μ_{dyn} = 0.31 („S”)–0.21 („D”)). This reveals the favourable effect of internal lubrication of PTFE on sliding characteristics. On smooth surfaces a long running-in period (increase in friction during first 850 cycles) is found before the stability stage is reached. Against rough surfaces the running-in period is minimised to 200 cycles. This running-in process coincidences with the formation of a transfer film on the counter face. Wear rate remains low in both cases (1×10^{-6} to 1.4×10^{-6} $mm^3\ N^{-1}\ m^{-1}$).
- PA have higher friction coefficient and wear rate than the previous two polymers, irrespective of the surface roughness. PA 6G-k shows better sliding properties than PA 6G and PA 6G-Mg because of the lubrication effect of oil. For the oil-lubricated material, a strong transition in friction is observed from a low coefficient to a higher value. On a smooth surface the friction coefficient remains low during a long period (within the same order of POM-H), whereas on rough surfaces the transition occurs more readily (within the order of PA 6G). The lubricating effect of oil is based on a partial diffusion of oil through the polymer bulk to provide lubrication at the contact surface. Therefore, the transition to a higher friction value is thought to be attributed to local melting and deformation effects on the surface. When the diffusion of oil is decreased because of deformation and melting of the polymer or insufficient wear at the surface layer, the oil effect is lost and the friction characteristics become similar to those of the unlubricated material (PA 6G), as revealed in Figs. 4. The surface degradation is more likely with rough mating plates since deformation becomes more important. Wear rate becomes higher than in case of unlubricated PA with stop of the oil effect (see Fig.12.). It is clear that oil-lubricated PA for the above mentioned reasons has to be protected against overloads. PA 6G-Mg shows about 20–25% higher sliding resistance compared to the natural PA 6G, due to the higher surface toughness and increased sticking to the mating plate of the first material. But the wear resistance is more favourable for PA 6G-Mg in this category.

Wear results at category I. 2h/ 100 N

The data of specific wear rate was measured on 2000 m sliding distance under 100 N and calculated from total diameter reduction of polymer cylinder, is represented in Table 4. All data is averaged from three repeated tests.

Table 4. The specific wear calculated from total thickness reduction after 2000 m sliding distance under 100 N

Normal Load (N)	Surface type	PETP k		POM-H		PA 6G k		PA 6G			PA 6G-Mg
		Wear depth, (μm)	Specific wear, ($mm^3\ N^{-1}\ m^{-1}$)	Wear depth, (μm)	Specific wear, ($mm^3\ N^{-1}\ m^{-1}$)	Wear depth, (μm)	Specific wear, ($mm^3\ N^{-1}\ m^{-1}$)	Wear depth, (μm)	Specific wear, ($mm^3\ N^{-1}\ m^{-1}$)	Wear depth, (μm)	Specific wear, ($mm^3\ N^{-1}\ m^{-1}$)
100	S	37	$1{,}46 \times 10^{-6}$	8	$1{,}51 \times 10^{-7}$	78	$4{,}79 \times 10^{-6}$	162	$1{,}35 \times 10^{-5}$	101	$6{,}29 \times 10^{-6}$

	D	30	$1{,}02 \times 10^{-6}$	27	$8{,}99 \times 10^{-7}$	479	$6{,}35 \times 10^{-5}$	267	$2{,}72 \times 10^{-5}$	129	$9{,}13 \times 10^{-6}$

I can range the wear data to three category 10^{-7}, 10^{-6} and 10^{-5} ($mm^3\ N^{-1}\ m^{-1}$) on both surface roughness. It seems from the data, that POM-H and PETP k show the most favourable wear on both surfaces. The range of the PA 6G-Mg and PA 6G didn't change, in opposite the PA 6G k where the wear increase suddenly on „D" surface.

3.1.2 Small-scale test category II. 1 h/200 N

With the application of higher load, the friction coefficients and wear rate of the polymers are shown in figure 5.

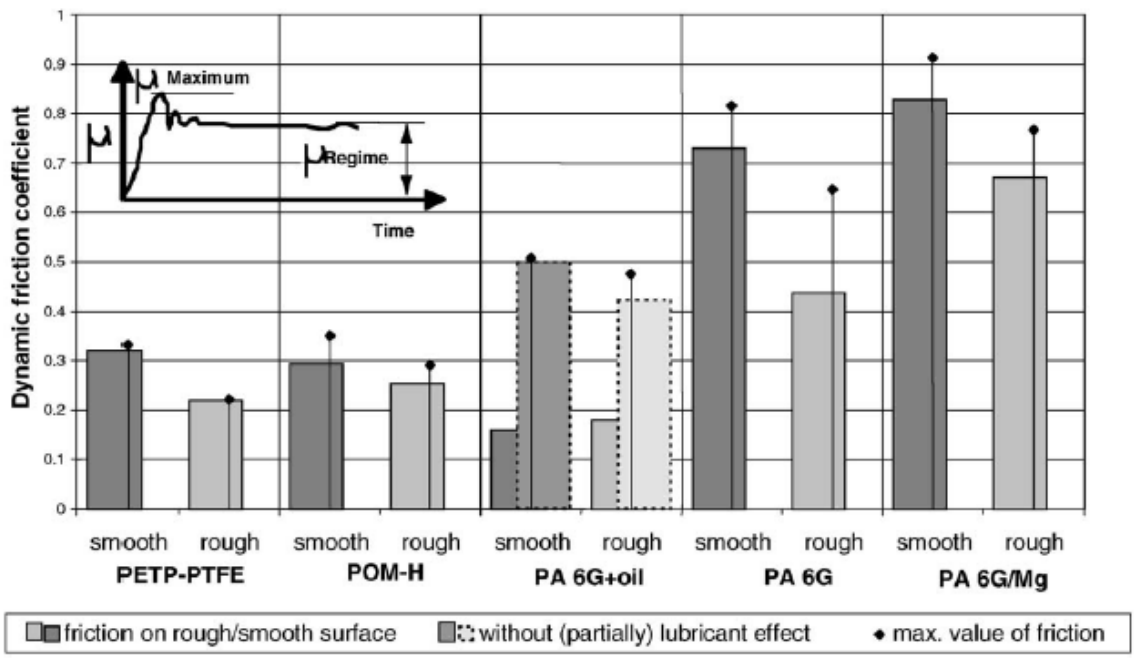

Fig. 5. Dynamic friction coefficient for different materials and surface roughness (category II: running time = 1 h-1000 m; load = 200 N; surface roughness „S" (R_z=0,1-0,4 μm) /"D"(R_z=0,6-1,6 μm)).

As shown in the column diagram, the influence of the surface roughness is decreased with an increase of load. When Fig. 5 is compared to Fig. 4, it appears that under high loads globally the friction coefficient is lowered, especially against smooth counter surfaces. PETP/PTFE and POM-H still show the best results for both roughnesses. The total wear remains small and is nearly the same for both polymers, as will be discussed later.

- For PETP/PTFE the beneficial effect of internal lubrication is maintained under high loads and the friction curve is stabilised immediately on smooth as well as on rough surfaces. The transition that was found against smooth surfaces under low loads disappears when high loads are applied. The wear rate is lower than in the previous category and is accompanied by lower friction.
- The friction coefficient of POM-H is lowered under high loads and the running-in time is decreased. However, on smooth surfaces its value is not constant but shows a slight increase during

the running-time. Wear rate is slightly higher than in category I, but is nearly the same (3×10^{-7} to 4.7×10^{-7} mm^3 N^{-1} m^{-1}) for both counter face roughness.

- Under high loads, the oil additive is a more effective lubricant for PA, since the difference between the friction coefficients of PA 6G/oil and pure PA 6G is further enlarged. Although the running-in period and the transition tendency from a low to a higher friction coefficient is very similar compared to the lower loads, the final value remains lower when higher loads are applied. Wear rates are very similar mainly on smooth counter surface. It is observed that the wear rate of PA 6G on rough surfaces decreases suddenly after a certain period of time. From the friction curve in Fig. 11 and the inspection of the metal surface, these phenomena are correlated with changes in the transfer process. For PA 6G/Mg, the same evolution of the friction coefficient is found for both low and high loads, but the general level is decreased when higher loads are used. Although nearly similar friction results occur at both roughness (μ_{dyn} =0,62), the wear is quite different and increased on rough surfaces (1×104 mm^{-3} N^{-1} m^{-1}).

Wear results at category II. 1h/ 200 N

The data of specific wear rate are shown in Table 5. All data is averaged from three repeated tests.

Table 5. The specific wear calculated from the total thickness reduction after 1000 m sliding distance under 200 N

Normal load, (N)	Surface type	PETP k		POM-H		PA 6G k		PA 6G		PA 6G-Mg	
		Wear depth, (μm)	Specific wear, (mm^3 N^{-1} m^{-1})	Wear depth, (μm)	Specific wear, (mm^3 N^{-1} m^{-1})	Wear depth, (μm)	Specific wear, (mm^3 N^{-1} m^{-1})	Wear depth, (μm)	Specific wear, (mm^3 N^{-1} m^{-1})	Wear depth, (μm)	Specific wear, (mm^3 N^{-1} m^{-1})
200	S	22	6.54×10^{-7}	13	3.02×10^{-7}	64	3.3×10^{-6}	65	3.33×10^{-6}	177	1.45×10^{-5}
	D	25	8.21×10^{-7}	18	4.72×10^{-7}	141	1.04×10^{-5}	294	3.29×10^{-5}	706	0.000113

Similarly to the previous results based on the table 5. I can range the wear data to three category 10^{-7}, 10^{-6} and 10^{-5} (mm^3 N^{-1} m^{-1}) on both surface roughness. It seems from the data, that POM-H and PETP k show the most favourable wear on both surfaces once more. The range of the PA 6G-Mg, PA 6G k and PA 6G didn't change, although the wear of PA 6G-Mg increased critically on „D" surface.

3.2. The friction coefficient and wear results measured in PIN ON DISC laboratory model system

The time-averaged steady-state dynamic friction coefficients and their maximum peak values are plotted in the column charts of figures *6* and 7 for the test parameters of category I. (10 N, 1 m/s) and category II. *(35* N, *0.5* m/s). For each polymer, four columns are shown: the first two correspond to the DLN-coated counter face with frictional radii of 14 and 21 mm; the second two columns are made for the steel counter face with frictional radii of 14 and 21 mm. Figures 6. and 7. include the obtained temperature data measured in the frictional track on the disc surface at the end of the sliding test, as well as the maximum temperature during the test.

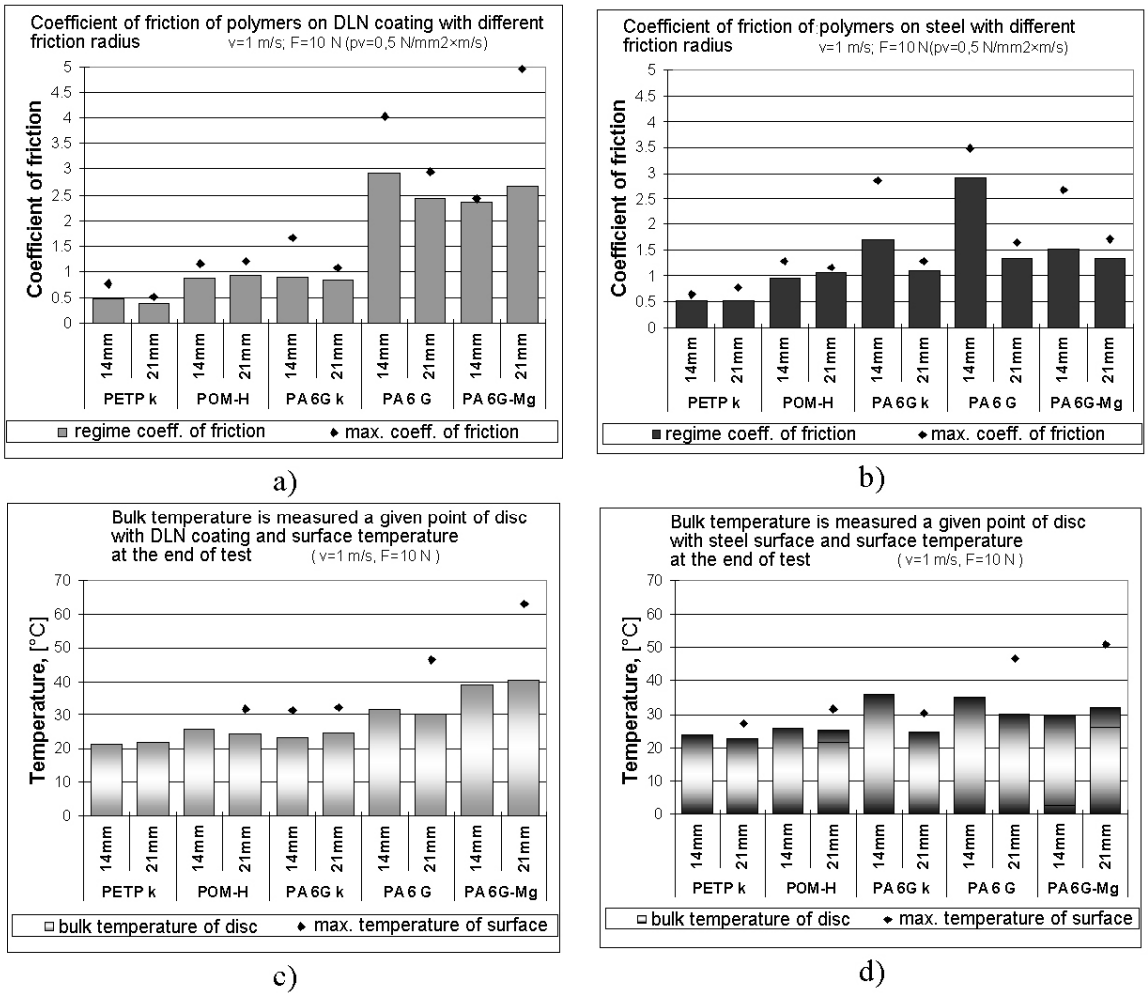

Figure 6. Time-averaged dynamic friction coefficients and bulk temperatures measured for different polymers on steel and DLN-coated counter faces at category I (normal load = 10 N; sliding speed = 1 m/s; friction radius = I 4/21 mm, R_z=0,04-0,08 μm).

a.)Friction coefficient and its max value on DLN coating, b.) Friction coefficient and its max value on steel surface, c.) Bulk temperature is measured a given point of disc with DLN coating and surface temperature at the end of test d.) *Bulk temperature is measured at a given point of disc without coating* and surface temperature at the end of test

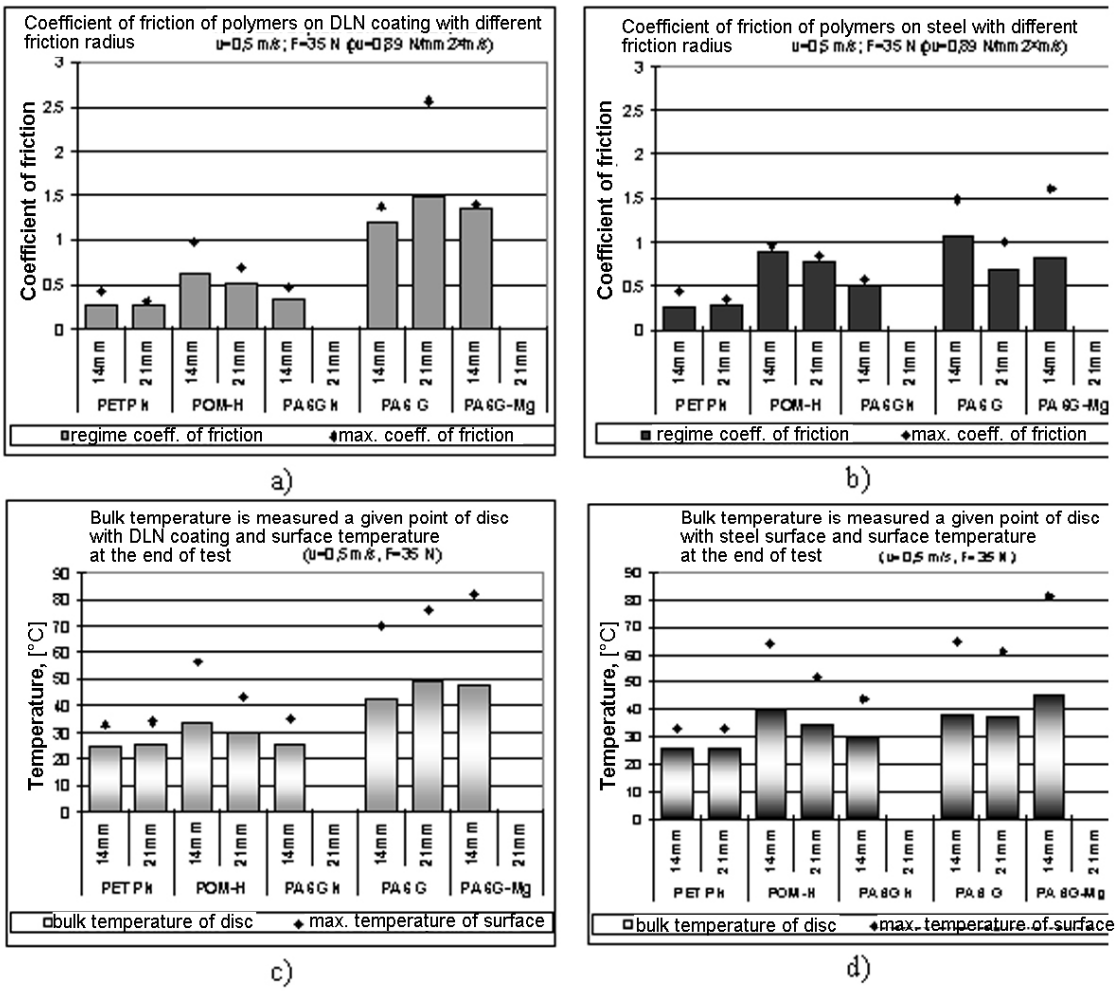

Figure 7. Time-averaged dynamic friction coefficients and bulk temperature measured for different polymers on steel and DLN-coated counter faces at category II.
(normal load = 35 N; sliding speed = 0,5 m/s; friction radius = I 4/21 mm, R_z=0,04-0,08 μm).
a.)Friction coefficient and its max value on DLN coating, b.) Friction coefficient and its max value on steel surface, c.) Bulk temperature is measured a given point of disc with DLN coating and surface temperature at the end of test d.) *Bulk temperature is measured at a given point of disc without coating* and surface temperature at the end of test

It is clear from diagrams there is a general tendency that the dynamic friction coefficients are higher for category I. (10 N, I m/s) than for category II. (35 N, 0,5 m/s) in the case of all tested materials, in agreement with the general rule that the dynamic friction coefficient decreases with increasing normal load.

Concerning the classification of the polymer test materials, the following trends become clear:

Among all polymers, PETP k shows the lowest friction coefficient on both steel and DLN coatings, in parallel to only a slight increase in temperature *(5* ^{0}C) during the test. The final temperature is independent of the type of counter face. For POM-H, the friction coefficient is increased with respect to PETP k, and it shows lower values on a DLN surface compared with steel counter faces. Differences are small under low loads of category I (10 N, 1 m/s), but become clearer under higher loads of category II. (35 N, 0.5 m/s). Parallel to the lower friction on DLN, the temperature rise on the coated surfaces remains lower than on steel surfaces.

For polyamides in general, the friction coefficients as well as the contact temperatures are higher than for POM-H and PETP/PTFE. For pure PA 6G and PA 6G-Mg, friction on DLN surfaces is higher than on steel counter faces, especially when after a certain sliding time a transition has occurred. With addition of oil as an internal lubricant, the friction coefficient drops towards values that are in the range of PETP k or POM-H. In this case, friction coefficients on DLN coatings again are lower than on steel counter faces, in analogy with PETP/PTFE and POM-H.

4. NEW SCIENTIFIC RESULTS

On the basis of my investigations of reciprocating sliding friction in cylinder on plate tribo system with polymer-steel sliding pairs I have established the followings:

Thesis 1.: The followings are true for the different polymer-steel sliding pairs:

1.a At the start of the tests there is a slight difference between the friction coefficient of various polymers ($\mu_{kezdeti}$=0,15-0,25), but later it changes according to the types of polymers. There is a strong difference between the sliding distances to reach the steady-state of the different polymers.

1.b The characters and the values of the friction coefficient depend on the surface roughness of the steel and on the load. When the surface is rough (R_z=0,6-1,6 μm) and the load is higher (F_N=200 N) the friction coefficient smaller. Only PA 6G k differs from this statement, because its friction coefficient is higher on rougher surface than on the smoother (R_z=0,1-0,4 μm). In case of lower load (F_N=100 N) the difference of the friction coefficients is higher. This statement was found for both on rough and on smooth surfaces. This proves the strong role of the adhesion between the sliding surfaces.

1.c It is generally true that the static friction coefficient is higher (with 55-65%) than the value of dynamic friction coefficient, but their tendencies are similar. Regarding the ratio between the dynamic and static friction the tested materials can not be considered as anti-stick-slip materials.

Thesis 2.: I found strong connection between the surface energy and friction coefficient of the polymers in my investigations: If the value of the polar component of the surface energy is higher than the friction increases, too. (Figure 8.)

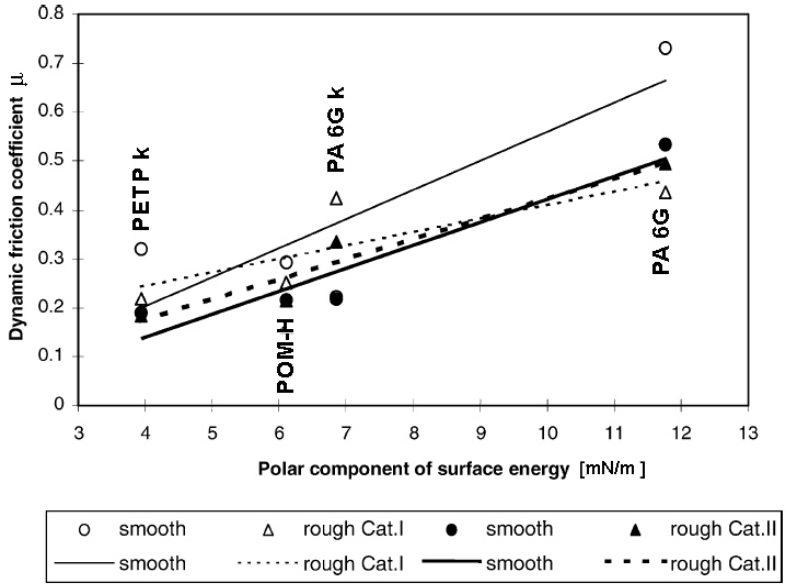

Fig. 8. Dynamic friction coefficients of polymers correlated to the polar component of their surface energies.

Thesis 3.: I found strong connection between the polymer transfer film and friction coefficient of polymers: When the friction coefficient was stabilised on a higher value thick polymer layer developed on the steel surface. (Figure. 9/a.)

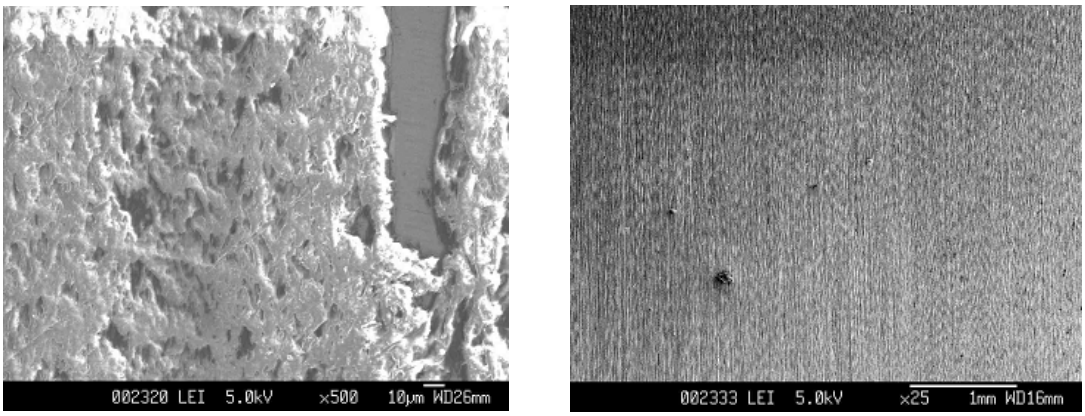

a) b)

Fig. 9. Different wear tracks on the smooth surface of steel after tests: PA 6G transfer film (a) detail x500, at "S" steel surface; PA 6G k transfer film (b) detail x25, at "D" steel surface, in both cases F_N=100 N.

Thesis 4.: The efficiency of the internal lubricants of the polymers depends on the types of lubricant. The PTFE – as solid lubricant – remained active during the complete running period. The oil content could reduce the friction only on the first period of running; the friction coefficient was stabilized on higher value later. The effect of oil depended on the surface roughness. The friction coefficient started to increase sooner on rougher surface than on smoother. During low load (F_N=100N) the value of the increasing friction coefficient nearly reaches the friction of natural polymer. In spite of the increasing friction the oil could prevent the development of any polymer layer on the steel surface.

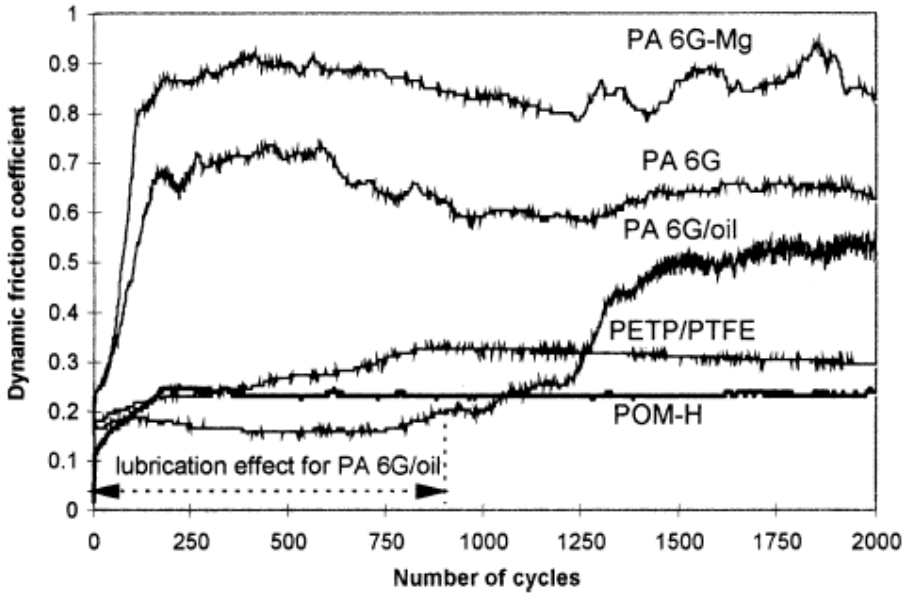

Fig. 10. Dynamic friction curves of polymers against smooth steel surface at F_N=100 N.

Thesis 5.: I found connections between the transfer polymer layer and the wear:

5.a If rough polymer layer can not develop on the steel surface, the wear of polymer will not follow the experimentally accepted proportional function between the wear, load and sliding distance. Apart from one exception (POM-H on smooth surface) the specific wear rate (dV $F_N^{-1}L^{-1}$) under 100 N and on 2000 m sliding distance is higher than under 200 N on 1000 m sliding distance.

5.b Apart from one exception (PETP k, F_N=100 N) the wear of the polymers is always higher on rougher surfaces than on smoother. It refers to the important role of deformation and cutting, which are caused by surface roughness. The reason of difference at PETP k may origin from PTFE transfer layer on the steel surface filling up the roughness and reducing the deformation and cutting.

Thesis 6.: I found connection between the friction and wear:

6.a In spite of the fact that in general there is no connection between the friction and wear, the test results show some relations. The higher friction coefficient belonging to lower load meets higher specific wear rate, if a rough polymer layer can not be developed. Figure 11 and 12 demonstrate the change of the specific wear rate per stroke, which is calculated from the continuously measured wear and elastic deformation during the test. When the friction decreases the wear decreases, too. When the friction coefficient increases because of the thick and rough polymer layer the wear increases, too.

6.b In the research system the correlation between the friction and wear proves that the production technology of cast polyamide 6 has an influence on the tribological properties: the change of friction coefficient caused a remarkable change in the wear for both natural matrix of cast PA 6G and oil filled PA 6G k, too. The specific wear shows moderate values on the stabilized part of the friction curve. However, I did not found connection between the wear and the friction in case of PA 6G-Mg (Mg catalytic).

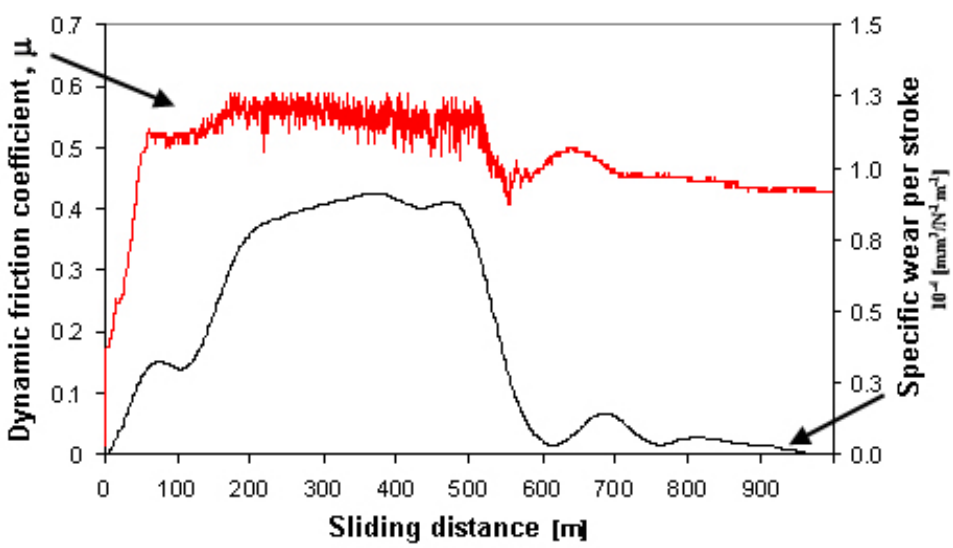

Figure 12. Change of the wear rates and dynamic friction coefficient of PA 6G due to the sliding distance during the tests. (F_N=200 N; Surface roughness "D" (test 291.))

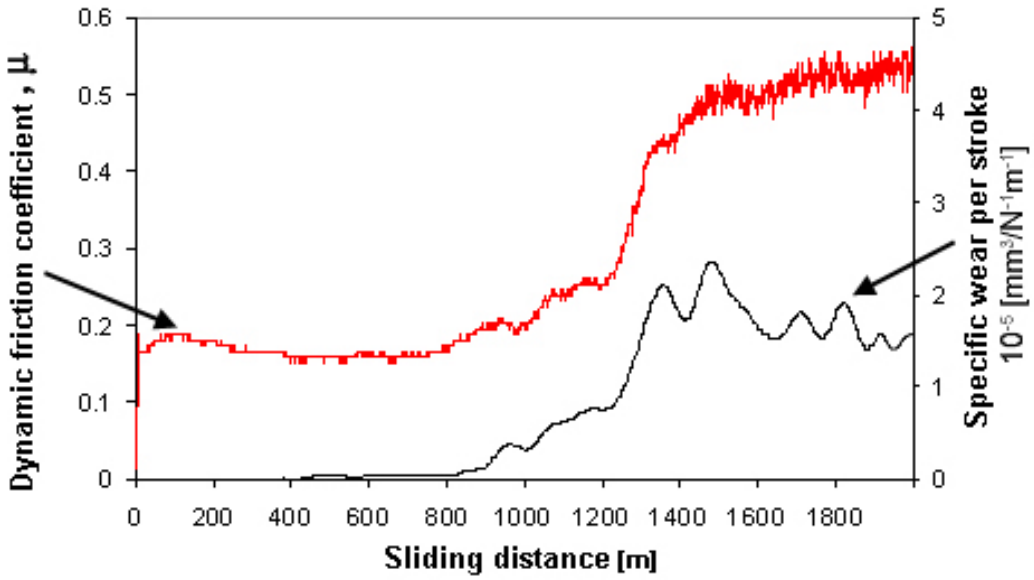

Figure 12. Change of the wear rates and dynamic friction coefficient of PA 6G k due to the sliding distance during the tests. (F_N=100 N; Surface roughness "S" (test 91.))

On the basis of my investigation of pin on disc tribo systems with continuous sliding friction I have established the followings:

Thesis 7.: It was found true for the friction coefficient of polymers:

7.a The friction coefficient depends on the type of mating surface: The friction coefficient of polymers sliding on DLN coated steel surface differs from the sliding on pure steel surface, in spite of that there is no significant difference between the roughness of the surfaces. PTFE filled PETP the only exception was found as it shows near similar friction coefficients in both load category (F_N=10 and 35 N), which is caused by the thin polymer layer on the steel surface (Figure 13.).

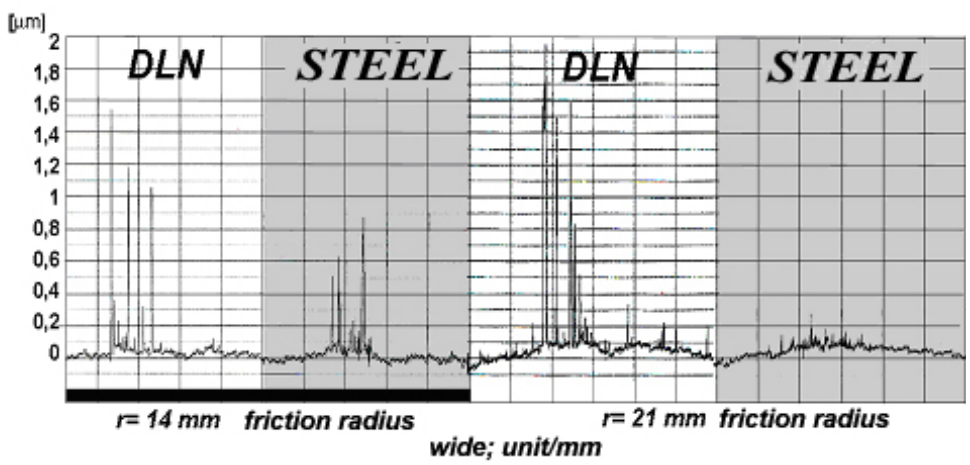

Figure 13. Transfer film profile of PETP k on the surface of mating plate in PIN ON DISC test system in II. category.

7.b The friction of polymers depends on the polymer films developed on the steel and DLN surfaces. The test results and surface photos demonstrate that in case of low friction coefficient, the polymer film is negligible. If the friction coefficients are higher, thick polymer layers are developed. (Figure 14.)

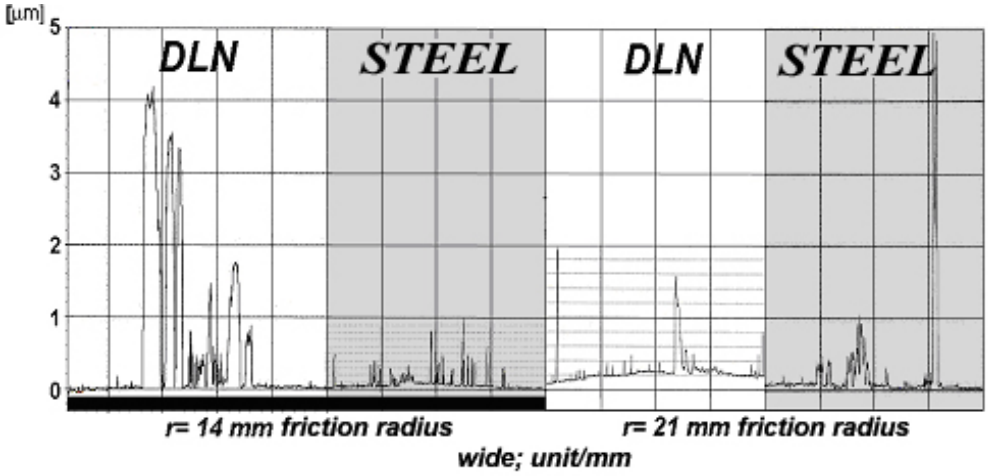

Figure 14. Transfer film profiles of PA 6G-Mg on the surface of mating plate in PIN ON DISC test system in I. category.

Thesis 8.: I proved the effect of the surface energy and the heat conduction:

8.a The DLN coated steel surface has a lower surface energy, which can decrease the adhesion component of friction in general. This effect is influenced by the construction and operating condition e.g. heat conduction. The friction behaviour of the tested polymers can be classified in two ways: In case of POM-H and PETP filled with PTFE the advantageous effect of the low DLN surface energy can act, but in case of the cast polyamide 6 catalysed with Mg and Na the construction was found dominant (heat conductivity).

8. b I worked out an investigation method (figure 15.) to justify that the heat conduction of DLN coated steel disc worse than the steel disc without coating. This caused the higher friction of the cast polyamide 6 types (Fig. 16.).

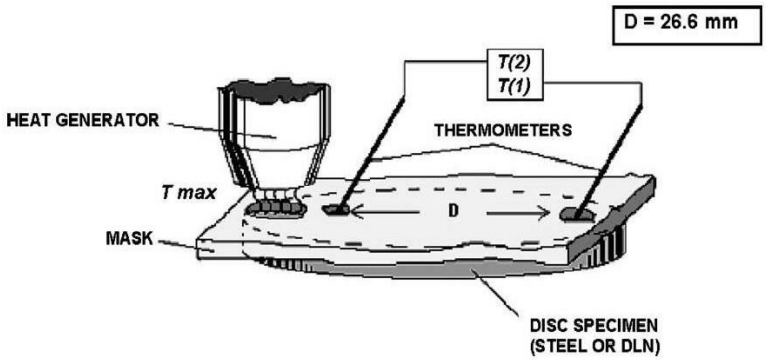

Figure. 15. Experimental set-up to determine the thermal conductivity of steel and DLN-coated counter faces. (T_{max} - maximum temperature near the heat generator, T(2) - temperature near the heat generator, T(1) - temperature farther from heat generator)

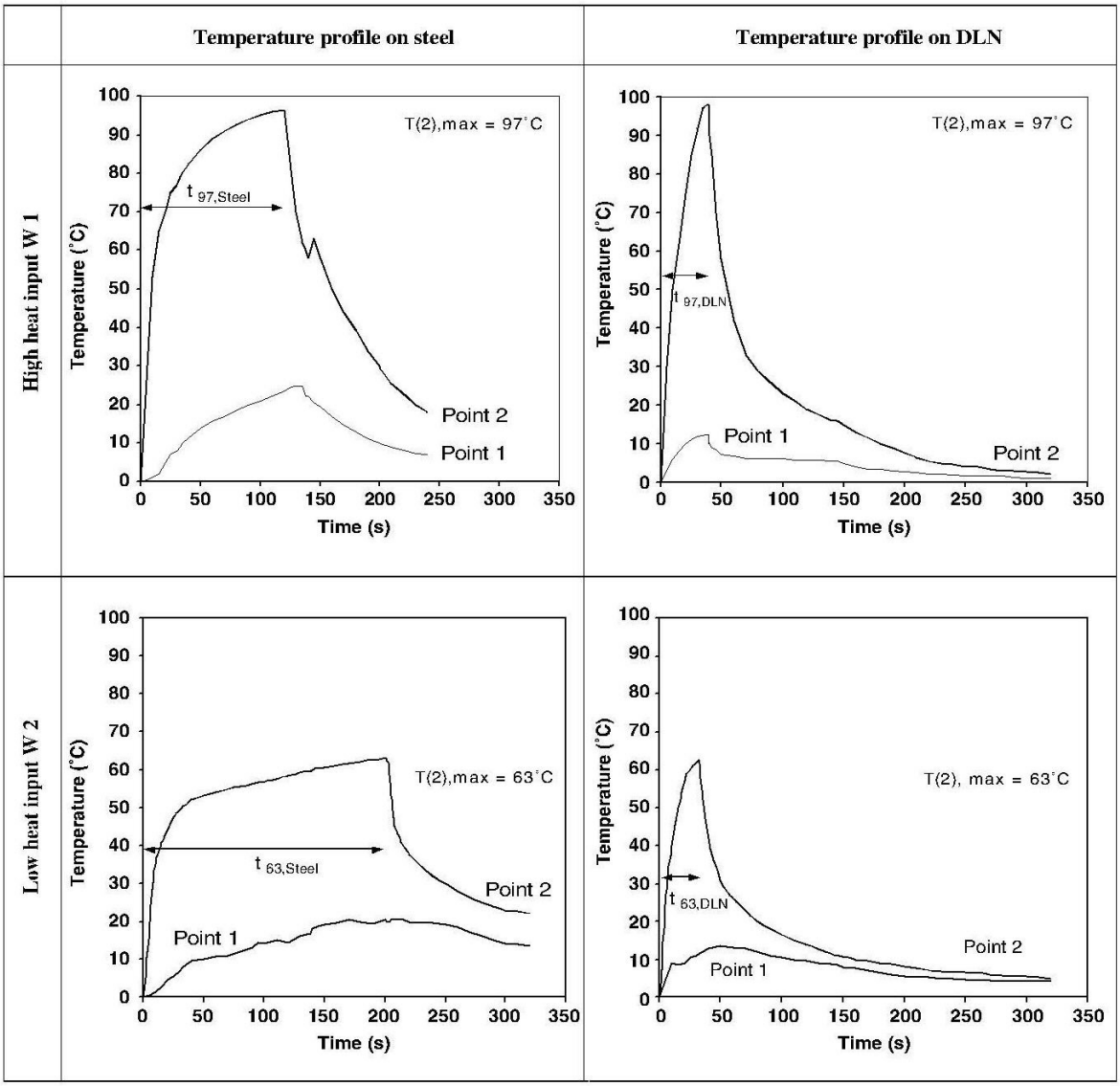

Figure 16. Measured temperature profiles for steel and DLN-coated counter faces as a function of time for different levels of heat input.

Thesis 9.: On DLN coated steel surfaces:

- The effect of the internal oil lubrication of polyamides is more effective than on pure steel surface.
- The friction coefficient of POM-H lower than on pure steel surface especially under higher load level.
- The friction coefficient and the disc surface temperature are higher for the natural matrix cast polyamides 6 without internal lubrication (PA 6G, PA6G-Mg) than on steel disc without DLN coating.

5. CONCLUSIONS, SUGGESTIONS

Based on the results of the experiments, the following conclusions can help and improve the further tribotesting of polymers, the proper material selection and design.

From the CYLINDER ON PLATE research:

- Among the investigated polymers taken from the engineering practice the PTFE filled PETP (PETP k) and POM-H are most suitable sliding materials, because their friction are lower and their wear resistance is higher.
- The changes of friction coefficients with counter face roughness are in accordance with the existence of an optimal surface roughness, which is lower in cases of PETP/PTFE, and POM-H, than in case of cast PA 6. Wear rates are higher on rougher surfaces for cast PA 6.
- The effect of the internal oil lubrication in case of cast PA 6 is different from the effect of solid PTFE lubrication in PETP. In case of PA 6G/oil the efficiency of the lubrication depends on the load and surface and under extreme condition can be stopped. Opposite the oil the addition of PTFE has a stabilising effect on the friction. The solid PTFE lubricant can generate an even transfer film in the sliding area. Friction and stick-slip is eventually reduced by the formation of a transfer layer rich in PTFE.
- Some melting was observed in case of natural PA 6G-Mg and natural PA 6G during the tests under higher load on rough surfaces, which refers to the overload situation of polymers, but this process can not occurred for PA 6G/oil.
- The end of the lubrication effect in case of PA 6G k also means an overload situation, while the solid PTFE lubricant in PETP k explains their favourable lubricating effect continuously even under high load.

From the PIN ON DISC research:

- The heat conductivity of the construction depends on the surface material. The heat conduction of the DLN coated disc was worse than on pure steel disc. It is disadvantageous for the friction of PA 6G and PA 6G-Mg. The polymer transfer and the melting phenomenon increase with the higher temperature resulting polymer/polymer sliding pair with strong adhesion.
- It can be stated for PETP k, POM-H and PA 6G k that the application of DLN coated steel mating surface is favourable since the friction coefficient remains low. The role of the heat conductivity of the mating counter faces is less important. The tribological behaviour is mainly indicated by the adhesion mechanisms in the given system.

Suggestions for further research work:

- One field of the tribology research is the wear measurement. I faced the problem of the wear measurement in counter formal contact reaching high stress levels and deformation during the running-in stage of sliding. A method is suggested to distinguish the real wear component.
- For better practical applications such as DLN coated bearings having high surface hardness, controllable surface roughness and low surface energy. The heat conductivity should be improved. One solution can be the temperature control by means of re-construction or external surface cooling. It is assumed that the design of air flow cooled bearings is beneficial to extending the lifetime in contact with high friction polymers, since cooling reduces the friction coefficients on both steel and DLN-coated counter faces. Further investigations are needed to clarify the problems of heat conductivity of DLN coated steel materials.

6. SUMMARY

There is an increasing tendency to replace original metal components by engineering plastics (sliding bearings, gears, gateways, etc.) in the tribology applications. There is a new possibility to mate the engineering polymers with up to date coatings, like the DLN coating, which is one of the types of Diamond-like carbon (DLC) coatings.

The purpose of my study was to compare the tribological properties of different engineering polymers, based on the results of different laboratory friction model tests. Also I wanted to investigate the effect of different lubricants additives and behaviours against over-load. Furthermore my aim was to compare the effect of up-to-date DLN coating and surface without coating (steel) on sliding friction against engineering polymers.

In reviewing the professional literature, I have looked through more than eighty publications published mainly in foreign countries. I have prepared a summary on the basic tribological knowledge connected to the subject and on the results achieved in this field so far. In the various chapters I highlighted unsolved problems of the field and the deficiencies of the present-day knowledge. In connection with literature, I gave short review about the agricultural application of polymers.

For the investigation of friction of different engineering polymers (polyamide 6, polyethylene, therefthalat, polyoximethilene) I used two types of small-scale experiments: cylinder-on-plate and pin-on-disk. During the examination of friction mechanism I changed the parameters (the type of motion, velocity and load) and used dry polymer-steel or polymer-DLN coating friction pairs.
These model systems gave the next possibilities:

- The reciprocating sliding friction, with short stroke, with counter formal cylinder-on-plate contact made it possible to model high load on small-scale specimens. The high load caused the deformation of polymer during the friction and the deformation had an effect on the friction, wear and polymer transfer of the sliding pairs.
- In the pin-on-disk small-scale tribological system I compared the effect of DLN coatings and steel surface on the friction of polymers. Because of the conformal contact, the low load and the low surface roughness can mainly cause adhesion.

In order to determine the tribological characteristics, the following measurements were carried out:

- The surface energy of the examined materials was determined and it was contrasted with sliding. Besides this, the effect of DLN coating on heat conduction was showed, which influenced the friction of polymer types.
- Finally in both systems I ranked the examined polymers according to friction and wear behaviours. I summarized the characteristics of mechanical and surface energies and the effect of internal lubrication on friction and wear. By examining the surfaces I proved the transfer layer deposits and its extension. I showed the role of DLN coating of polymers on friction and it was contrasted with the steel surface.

I evaluated the results of my investigations and prepared my thesis. These are even separately, which are summarised in thesis booklet. Finally, I prepared proposals on how to utilise the achieved results in the practice and on the directions of the further investigations.

The small-scale tribological tests with engineering polymers with steel and DLN coating provided new information about their tribological behaviours both under high load and unfavourable contact geometry. These results extend our tribological knowledge about polymers and show new possibilities for practical application.

LIST OF THE CONNECTED PUBLICATIONS

Periodical articles:

- In foreign languages with impact factor (IF):

[1] **ZSIDAI L.,** et al. (2002): The tribological behaviour of engineering plastics during sliding friction investigated with small-scale specimens. *Wear,* 253 673-688. p.

[2] **ZSIDAI L.,** et al. (2004): Friction and thermal effects of engineering plastics sliding against steel and DLN-coated counter faces. *Tribology Letters,* 17 (2) 269-288. p.

- *Opposed article in world language:*

[3] KALÁCSKA G., **ZSIDAI L.,** et al. (1999): Development of tribological test-rig for dynamic examination of plastic composites. Hungarian Agricultural Engineering. N.12/1999. Hungarian Academy of Sciences. 78-79. p.

- *Opposed article in Hungarian language:*

[4] KALÁCSKA G., **ZSIDAI L.,** DE BAETS P. (2000): Műanyag csúszóelemek abráziós tribológiai vizsgálatai. *Gépgyártástechnológia,* 40 41-49. p.

[5] **ZSIDAI L.,** KALÁCSKA G., DE BAETS P. (2000): Korszerű műszaki műanyagok tribológiai tulajdonságainak kutatása, kisméretű próbatestek csúszósúrlódás vizsgálatával. Tribological examination of up-to-date engineering plastics with small-scale testing. *Műanyag és Gumi,* 37 (11) 383-340. p.

[6] **ZSIDAI L.,** et al. (2001): Műszaki műanyagok súrlódása és kopása gyémántszerű karbonbevonaton és acél felületen mérve I-II. *Műanyag és Gumi,* 38 (10-11) 383-390 p.

[7] KERESZTES R., **ZSIDAI L.,** KALÁCSKA G (2001): Polimer felületek adhéziós vizsgálata. *Műanyag és Gumi*, 38 (12) 448-453. p.

[8] KERESZTES R., **ZSIDAI L.,** KALÁCSKA G (2002): Műszaki Műanyagok dinamikus tribológiai vizsgálata. *Műanyag és Gumi,* 39 (11-12) 427-432. p.

[9] **ZSIDAI L.,** PÁLINKÁS I., KERESZTES R. (2004) : Műszaki műanyagok súrlódása henger-sík tribológiai rendszerben végzett kisminta vizsgálatok alapján. *Gép,* 55 (3) 25-29. p.

[10] **ZSIDAI L.,** KALÁCSKA G., KERESZTES R. (2002): Túlterhelt műanyag gépelemek tribológiai sajátosságai. *Gépgyártás,* 44 (5-6) 26-27. p.

Other opposed sciencific article in world language:

[11] KALÁCSKA G., **ZSIDAI L.,** et al. (2001-2002): Tribology research of engineering plastics by different tests. Bulletin of the Szent István University. Gödöllő. 119-127 p.

Conference proceedings:

-*International conference proceedings:*

[12] KALÁCSKA G., KOZMA M., **ZSIDAI L.,** DE BAETS P. (2000): Engineering plastics in the technical development of mining equipment and machines. II. Conference on Mechanical Engineering Proceedings. Gépészet 2000 konferencia. Budapest. 573-577. p.

[13] DE BAETS P., VAN PARYS F., KALÁCSKA G., **ZSIDAI L.** (2000): The friction and wear of different polymers under high load conditions. 7th International Congress on Tribology. Budapest. 237-243.p.

[14] **ZSIDAI L.,** et al. (2001): Investigation of tribological properties of engineering Plastics with small scale specimens. 2nd World Tribology Congress. Vienna. 417-421.p.

[15] VERCAMMEN K., VAN ACKER K., MENEVE J., **ZSIDAI L.,** KALÁCSKA G., DE BAETS P. (2001): The friction and wear of different engineering polymers in contact with a Si-doped diamond like carbon coating. 2nd World Tribology Congress. Vienna. 329 p.

[16] **ZSIDAI L.,** et al. (2002):The effect of the thermal conductivity on friction of engineering polymers measured on DLN coating and steel surface mechanical engineering, III. Int Conf On Mechanical Engineering. Proceedings. Budapest. 316-320 p.

[17] **ZSIDAI L.,** et al**.** (2002): Tribological properties of PA, POM, and PETP polymers by different tribological systems. VIII. International Intertribo Symposium, Proceedings. Stara Lesna. 255-258. p.

[18] KALÁCSKA G., R. KERESZTES R., **ZSIDAI L.** (2002): Self-lubricating polyamides. VIII. International Intertribo Symposium, Proceedings. Stara Lesna. 194-198 p.

[19] KOCSIS Z., KERESZTES R., **ZSIDAI L.**, KALÁCSKA G. (2004): Developed test method for laboratory evaluation of engine oils. 8th International Conference on Tribology, Proceedings. Veszprém. 213-220. p.

[20] **ZSIDAI L.**, KERESZTES R., KALÁCSKA G. (2004): Development of dynamic tribotester, 8th International Conference on Tribology, Proceedings. Veszprém. 77-82. p.

–International conference abstract:

[21] **ZSIDAI L.,** KALÁCSKA G., PÁLINKÁS I. (2000): Tribological examination of up-to-date engineering plastics. Quality and reliability of machines. 5rd International scientific symposium. Nyitra. 2000 május. P. 81-83. ISBN 80 233 0361 9

[22] **ZSIDAI**, **L.** et al. (2002): The different tribological behaviour of polymers on DLN coating and steel surface. Insycont, Int. Congress On Tribology, Krakow (Poland). Tribologia nr.6/2002 (186), p 1737-1750

-Hungarian conference proceedings:

[23] KALÁCSKA G. **ZSIDAI L**. et al. (2001): Műanyagok adhéziós tribológiai vizsgálatai. MTA Agrárműszaki Bizottság, Kutatási és Fejlesztési Tanácskozás. Gödöllõ, 2001 január. 3.kötet. *Poszter előadás + absztrakt füzet*

[24] EBERST O., KALÁCSKA G. **ZSIDAI L**.(2001): Rekonstrukciós tervezések műszaki műanyagok alkalmazásával. MTA Agrárműszaki Bizottság, Kutatási és Fejlesztési Tanácskozás. Gödöllõ, 3. kötet 219-222. *Poszter +előadás + absztrakt füzet*

[25] KALÁCSKA G. **ZSIDAI L**. DE BAETS P. VERCAMMEN K. (2001): Dinamikus tribométer fejlesztése. MTA Agrárműszaki Bizottság, Kutatási és Fejlesztési Tanácskozás. Gödöllõ, január. 223-226 Poszter+előadás+absztrakt füzet

[26] **ZSIDAI L**. et al. (2001): Investigation of tribological properties of engineering plastics by different tests. MTA Agrárműszaki Bizottság, Kutatási és Fejlesztési Tanácskozás. Gödöllõ, 227-231 P. *Poszter +előadás + absztrakt füzet*

[27] **ZSIDAI L**, ELEŐD A, KALÁCSKA G. (2003): DLC-DLN felületi bevonatok jelentősége a súrlódó rendszerekben. MTA Agrárműszaki Bizottság, XXVII. Kutatási és Fejlesztési Tanácskozás. Gödöllõ, 3.kötet. p. 231-234 HU ISSN 1419-2357

[28] KERESZTES R, **ZSIDAI L**, KALÁCSKA G. (2005): Öntött poliamid 6 nano-kompozit tribológiai tulajdonságai MTA Agrárműszaki Bizottság, XXIX. Kutatási és Fejlesztési Tanácskozás. Gödöllõ, 2005 január. *Poszter+kiadvány*

-Hungarian abstract:

[29] DE BAETS P., VELDE F., **ZSIDAI L.**, KALÁCSKA G.(2000): Különböző műanyagok súrlódása és kopása nagyterhelésű rendszerekben. MTA Agrárműszaki Bizottság, Kutatási és Fejlesztési Tanácskozás. Gödöllõ, *előadás + absztrakt füzet*

[30] **ZSIDAI L**. et al. (2002): Friction and wear of plastics measured on DLN coatings. MTA Agrárműszaki Bizottság, Kutatási és Fejlesztési Tanácskozás. Gödöllõ, 2002 január. *előadás + absztrakt füzet*

[31] **ZSIDAI L.,** et al. (2002): Műszaki Műanyagok tribológiai kutatása adhéziós rendszerekben, XIII. Műanyagok műszaki alkalmazása és feldolgozástechnológiája konferencia (Mechanoplast). Symposium, Gyula ,2002 március 12-14.

[32] **ZSIDAI L**., PÁLINKÁS I., (2002) Korszerű műszaki műanyagok a Mezőgazdasági gépiparban. Gépesítési Társaság, Jubileumi Országos Gépesítési Tanácskozás Gyöngyös 2002. november 14-15. *előadás+absztrakt füzet*

[33] KERESZTES R., **ZSIDAI L.**, KALÁCSKA G. (2002), Dinamikus hatások modellezése, dinamikus tribométer bemutató MTA GAB Tribológiai Albizottság és a GTE Tribológiai Szakosztály szakmai nap SZIE Gödöllő, 2002. november 28.